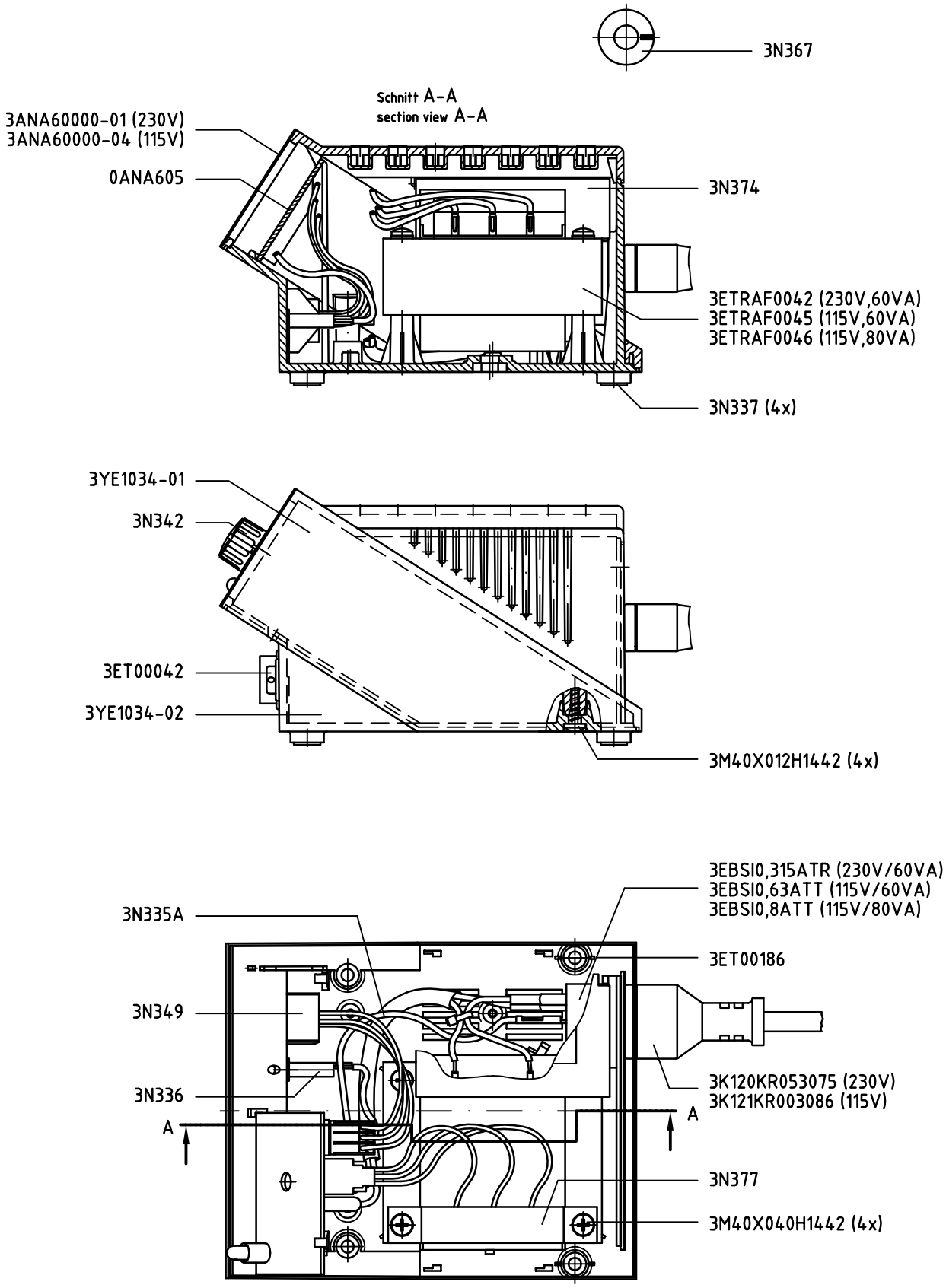
3N367
Schnitt A-A
section view A-A
3ANA60000-01 (230V)
3ANA60000-04 (115V)
0ANA605
3N374
3ETRAF0042 (230V,60VA)
3ETRAF0045 (115V,60VA)
3ETRAF0046 (115V,80VA)
3N337 (4x)
3YE1034-01
3N342
3ET00042
3YE1034-02
3M40X012H1442 (4x)
3EBSI0,315ATR (230V/60VA)
3EBSI0,63ATT (115V/60VA)
3EBSI0,8ATT (115V/80VA)
3N335A
3ET00186
3N349
3N336
3K120KR053075 (230V)
3K121KR003086 (115V)
A
A
3N377
3M40X040H1442 (4x)
Draufsicht ohne Gehäuseoberteil
horizontal projection without casing part II